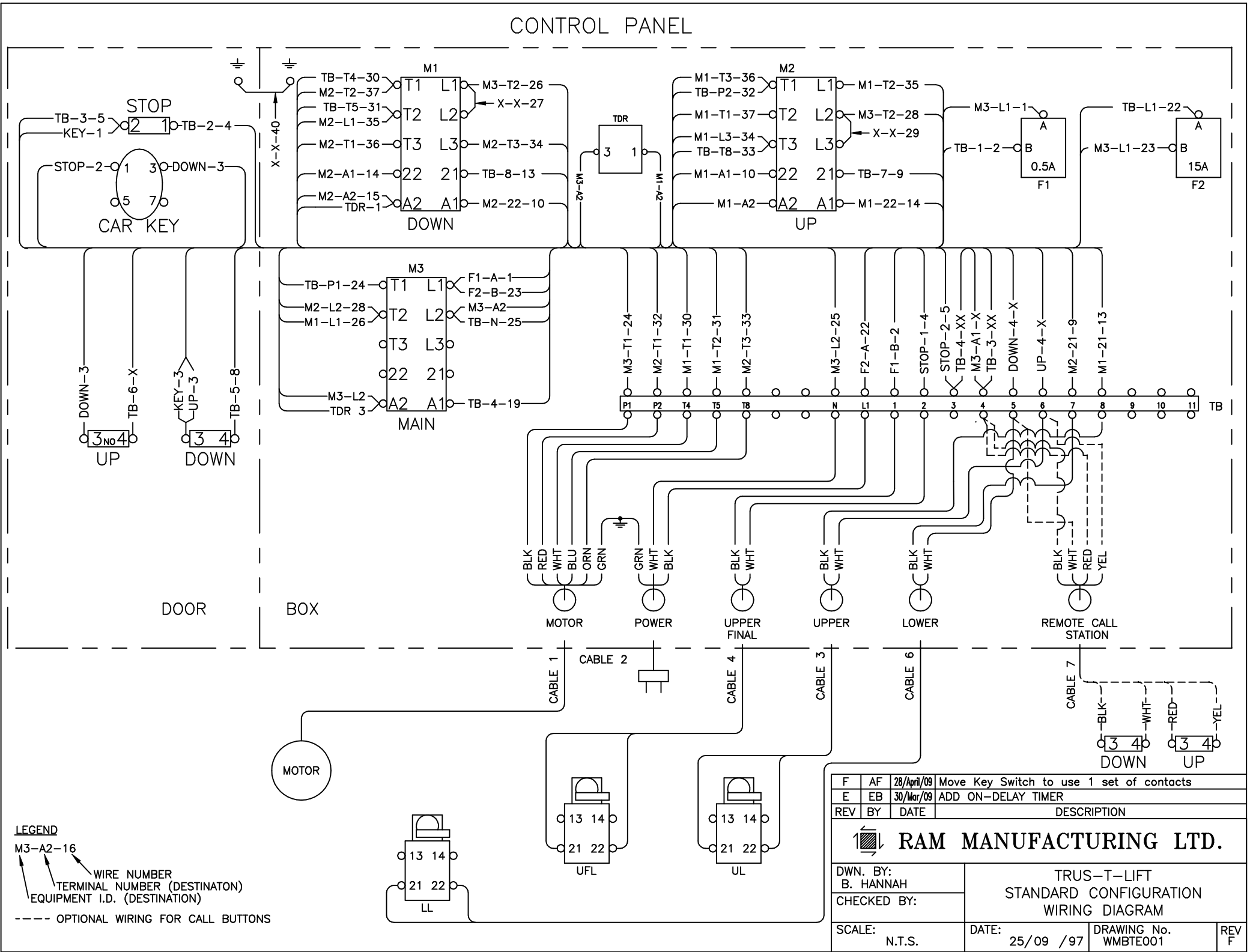
CONTROL PANEL
STOP
TB-3-5
KEY-1
TB-2-4
STOP-2
DOWN-3
CAR KEY
X-X-40
M1
TB-T4-30
M2-T2-37
TB-T5-31
M2-L1-35
M2-T1-36
M2-A1-14
M2-A2-15
TDR-1
M3-T2-26
X-X-27
M2-T3-34
TB-8-13
M2-22-10
DOWN
TDR
M3-A2
M1-A2
M2
M1-T3-36
TB-P2-32
M1-T1-37
M1-L3-34
TB-T8-33
M1-A1-10
M1-A2
M1-T2-35
M3-T2-28
X-X-29
TB-7-9
M1-22-14
UP
M3-L1-1
TB-1-2
0.5A
F1
TB-L1-22
M3-L1-23
15A
F2
M3
TB-P1-24
M2-L2-28
M1-L1-26
M3-L2
TDR 3
F1-A-1
F2-B-23
M3-A2
TB-N-25
TB-4-19
MAIN
DOWN-3
TB-6-X
KEY-3
UP-3
TB-5-8
UP
DOWN
M3-T1-24
M2-T1-32
M1-T1-30
M1-T2-31
M2-T3-33
M3-L2-25
F2-A-22
F1-B-2
STOP-1-4
STOP-2-5
TB-4-XX
M3-A1-X
TB-3-XX
DOWN-4-X
UP-4-X
M2-21-9
M1-21-13
TB
BLK
RED
WHT
BLU
ORN
GRN
MOTOR
POWER
UPPER FINAL
UPPER
LOWER
REMOTE CALL STATION
YEL
DOOR
BOX
CABLE 1
CABLE 2
CABLE 4
CABLE 3
CABLE 6
CABLE 7
DOWN
UP
MOTOR
UFL
UL
LL
LEGEND
M3-A2-16
WIRE NUMBER
TERMINAL NUMBER (DESTINATON)
EQUIPMENT I.D. (DESTINATION)
---- OPTIONAL WIRING FOR CALL BUTTONS
F AF 28/April/09 Move Key Switch to use 1 set of contacts
E EB 30/Mar/09 ADD ON-DELAY TIMER
REV BY DATE DESCRIPTION
RAM MANUFACTURING LTD.
DWN. BY: B. HANNAH
CHECKED BY:
TRUS-T-LIFT
STANDARD CONFIGURATION
WIRING DIAGRAM
SCALE: N.T.S.
DATE: 25/09 /97
DRAWING No. WMBTE001
REV F